REG	STATE	PROJECT	SHEET NO.	TOTAL SHEETS

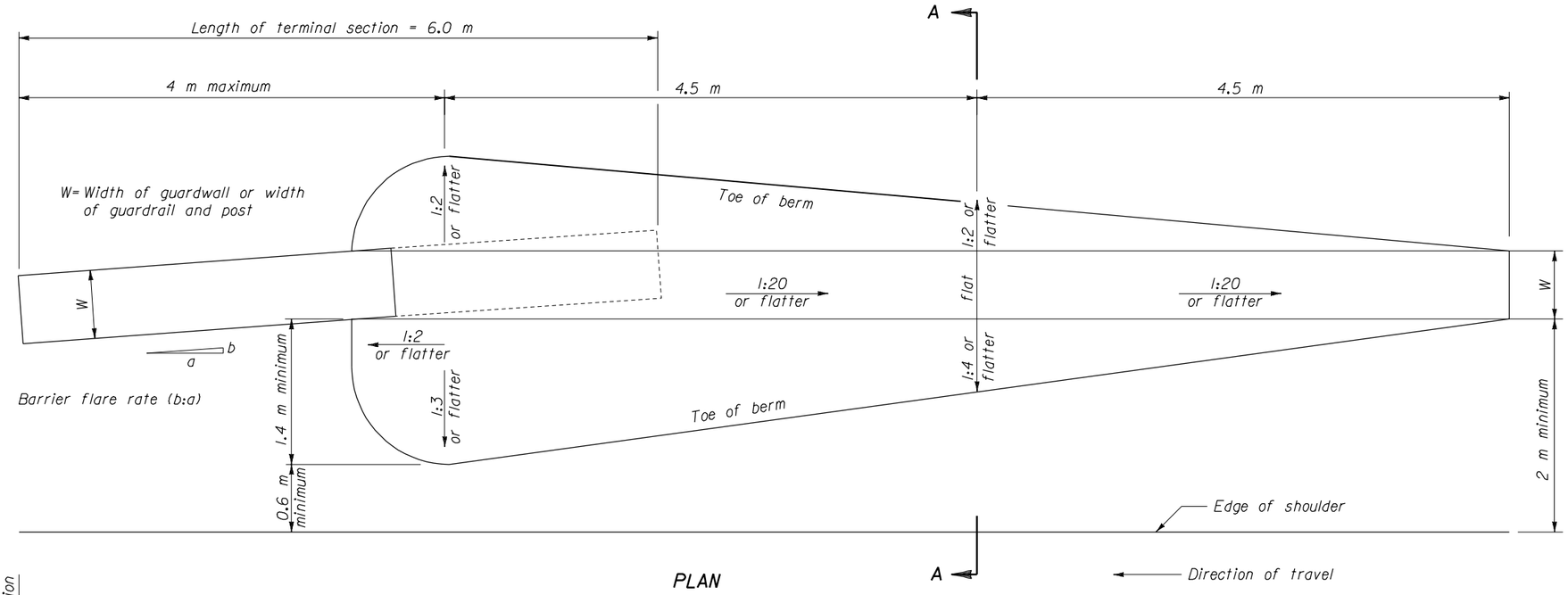

PLAN

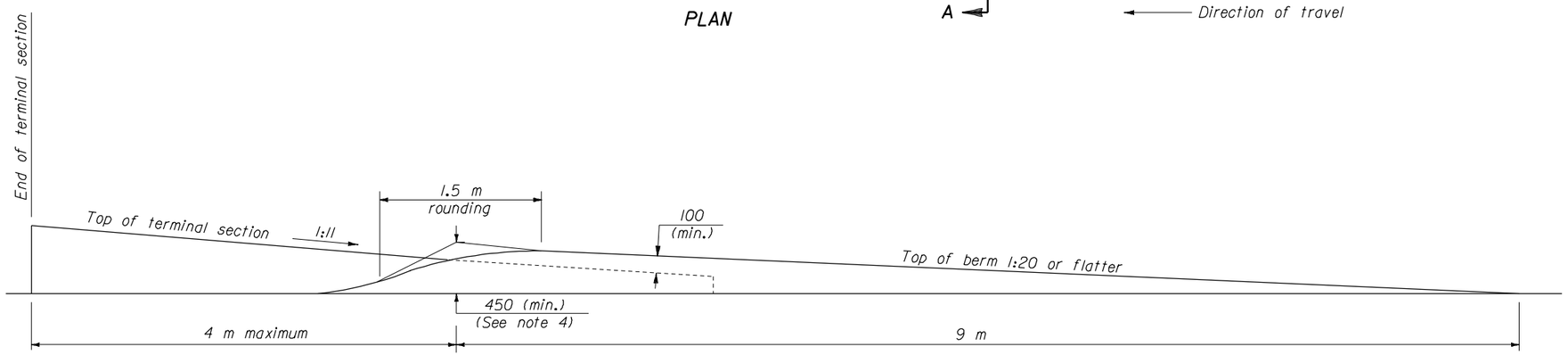

ELEVATION

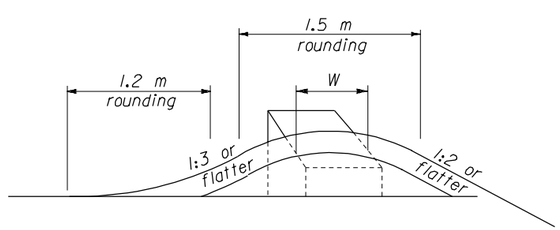

SECTION A-A

NOTES:

1. Unless otherwise shown, dimensions are in millimeters.
2. Vary the actual dimensions of the berm according to the variable dimensions shown and as directed.
3. See Standards M617-61, M618-3, and M620-2 for details of specified roadside barrier and terminal section.
4. If the taper on the top of the terminal section is steeper than 1:11 the minimum height of the berm is 600 mm.

NO SCALE

U.S. DEPARTMENT OF TRANSPORTATION
FEDERAL HIGHWAY ADMINISTRATION
FEDERAL LANDS HIGHWAY OFFICE

METRIC STANDARD

EARTH BERM FOR ROADSIDE BARRIER TERMINAL SECTIONS

STANDARD APPROVED FOR USE 03/96

REVISED: 8/97 7/98

STANDARD M204-1

26 FEB 99 07:31:45 I:\USRDANV\N\BARRIER\ART\WALL\MST204O1.DGN

REG	STATE	PROJECT	SHEET NO.	TOTAL SHEETS

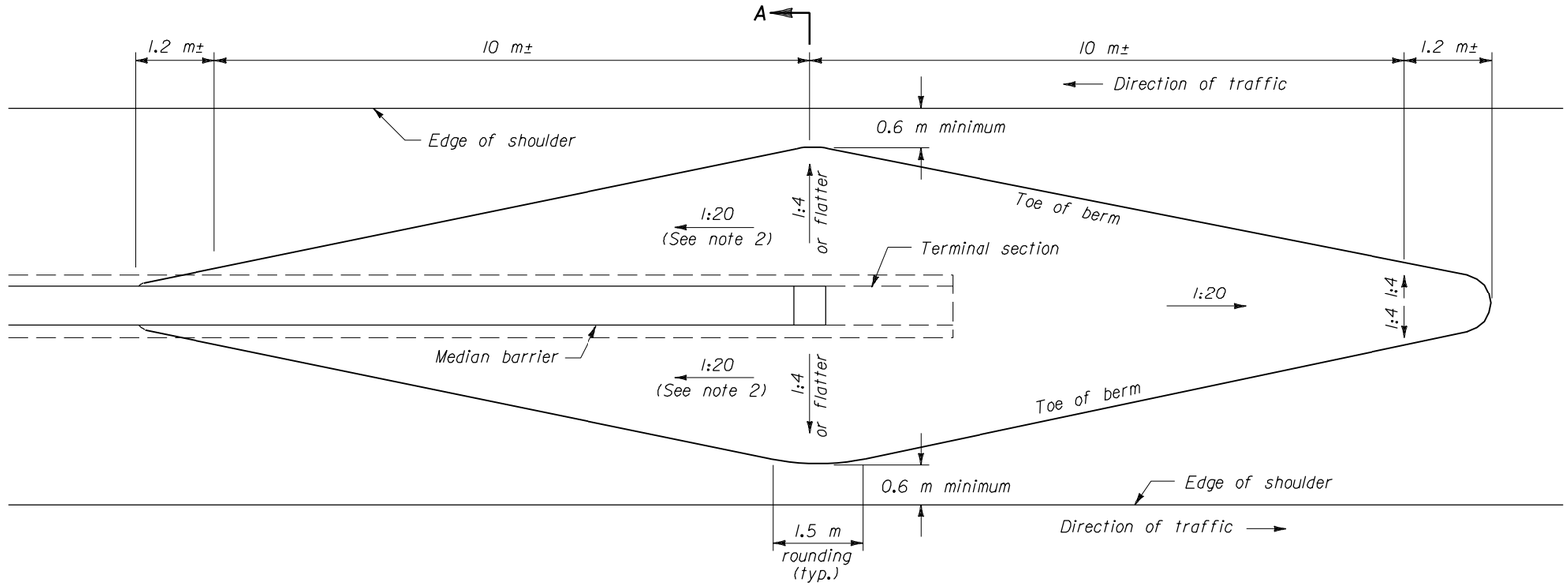

PLAN

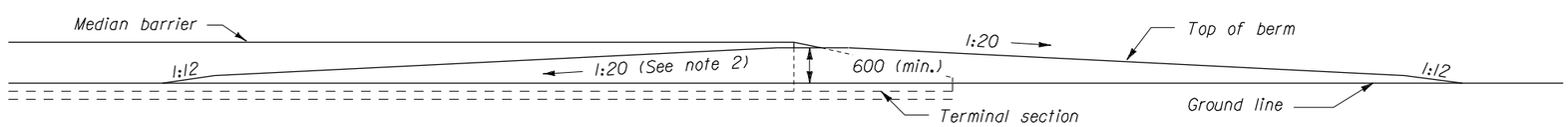

ELEVATION

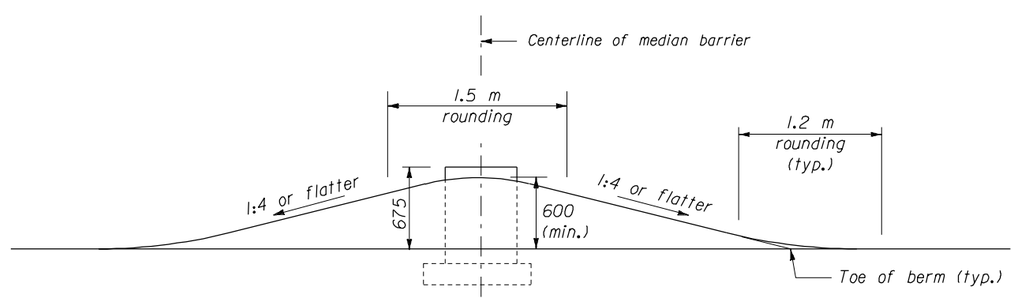

SECTION A-A

NOTES:

1. Unless otherwise shown, dimensions are in millimeters.
2. The 1:20 slope is the desired slope. The slope may be adjusted to meet field conditions as directed, (maximum slope 1:6).
3. See Standards M618-3 and M620-2 for details of specified roadside barrier and terminal section.

NO SCALE

U.S. DEPARTMENT OF TRANSPORTATION
FEDERAL HIGHWAY ADMINISTRATION
FEDERAL LANDS HIGHWAY OFFICE

METRIC STANDARD

EARTH BERM FOR MEDIAN BARRIER TERMINAL SECTIONS

STANDARD APPROVED FOR USE 03/96

REVISED: 7/98

STANDARD M204-2

26 FEB 99 07:33:14 I:\usr\danvan\barrier\artwall\mst20402.dgn

MST20402.DGN

REG	STATE	PROJECT	SHEET NO.	TOTAL SHEETS

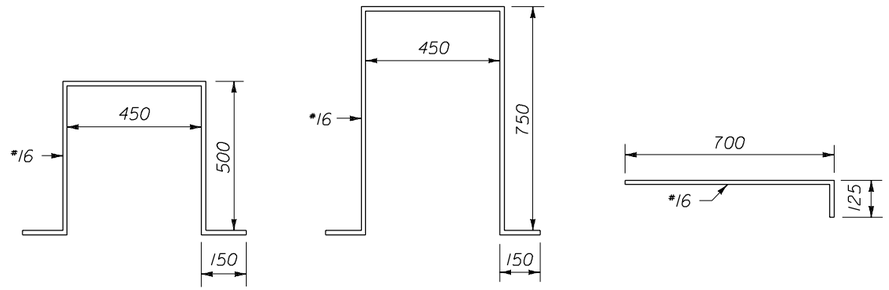

W1 BARS W2 BARS W3 BARS

BENDING DIAGRAMS

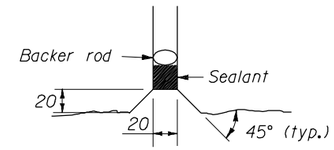

REAL JOINTS DETAIL

NOTES:

1. Unless otherwise shown, dimensions are in millimeters.
2. Each unit consists of three segments each of which have a different random masonry pattern as shown. All three segments are to interlock with each other to vary the order.
3. Sealant for the real joint covers the perimeter joint of the capstone, sides, and top and sides of the footing.
4. Precast the entire wall section, no cast-in-place is allowed.
5. Minimum concrete cover 50 mm unless shown otherwise.

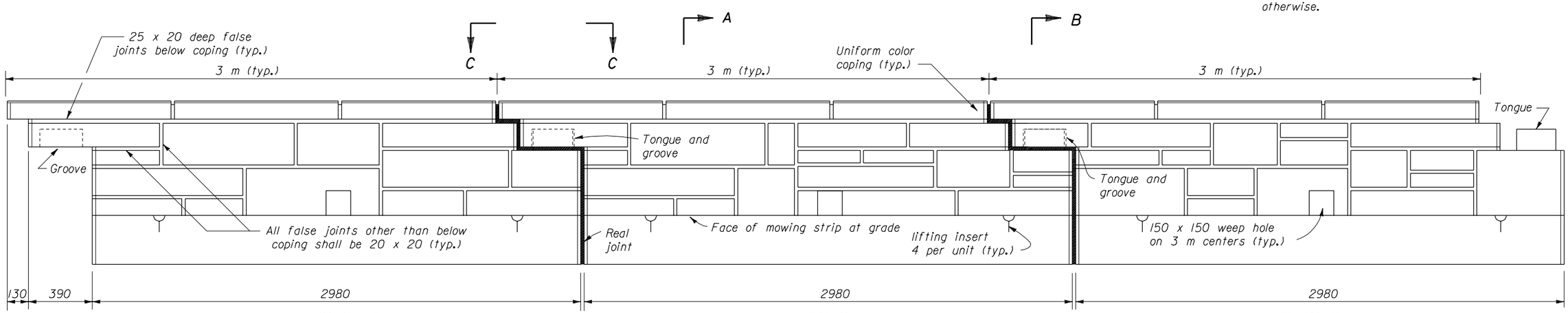

ELEVATION

PRECAST CONCRETE GUARDWALL

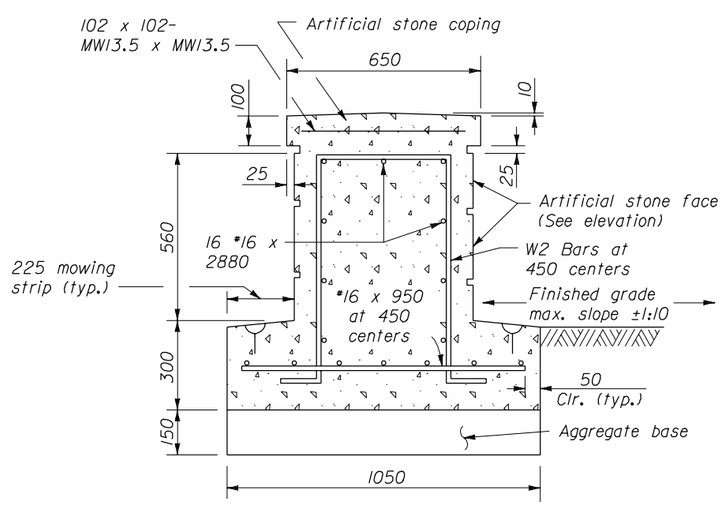

SECTION A-A

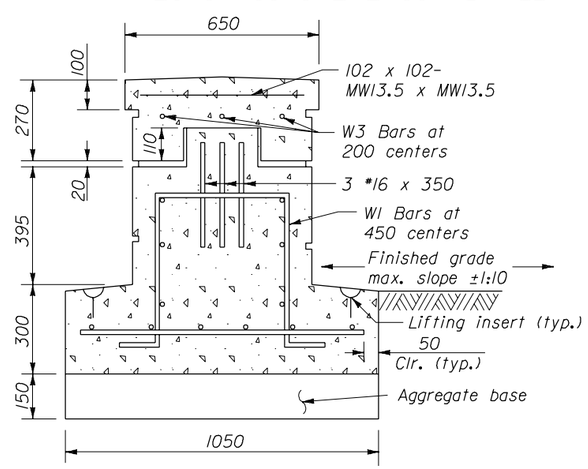

SECTION B-B

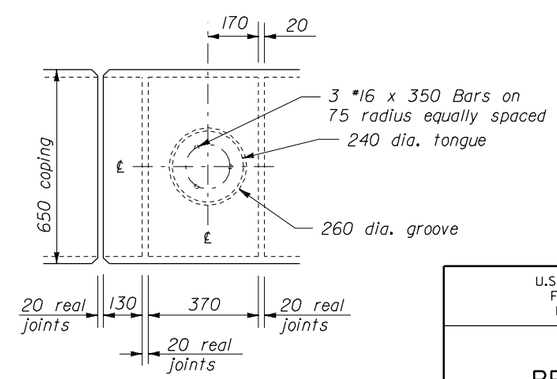

VIEW C-C

NO SCALE

U.S. DEPARTMENT OF TRANSPORTATION
FEDERAL HIGHWAY ADMINISTRATION
FEDERAL LANDS HIGHWAY OFFICE

METRIC STANDARD

PRECAST CONCRETE GUARDWALL, TYPE I

STANDARD APPROVED FOR USE 03/96

REVISED: 6/97 7/98

STANDARD M618-2

26 FEB 99 07:34:35 i:\usr\daman\barrier\artwal\mst61802.dgn

MST61802.DGN

REG	STATE	PROJECT	SHEET NO.	TOTAL SHEETS

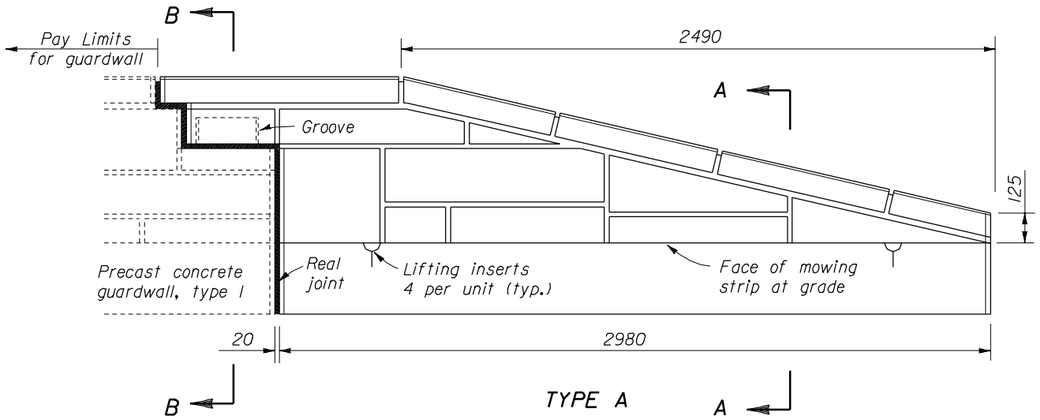

TYPE A

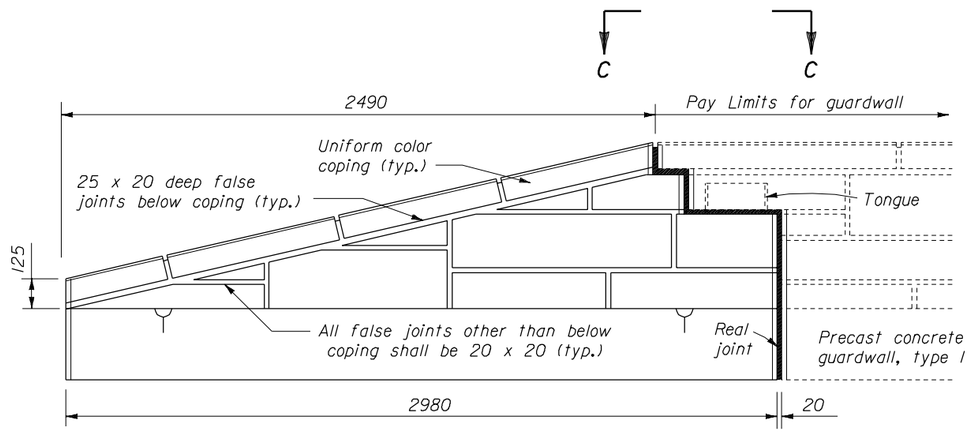

TYPE B

TERMNAL SECTIONS

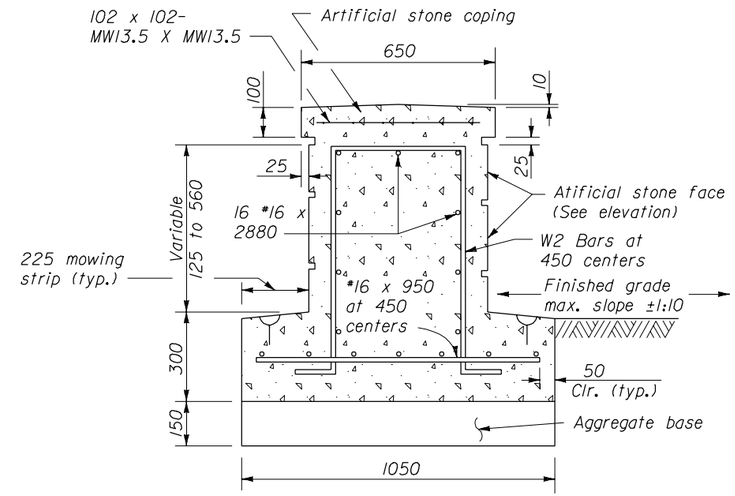

SECTION A-A

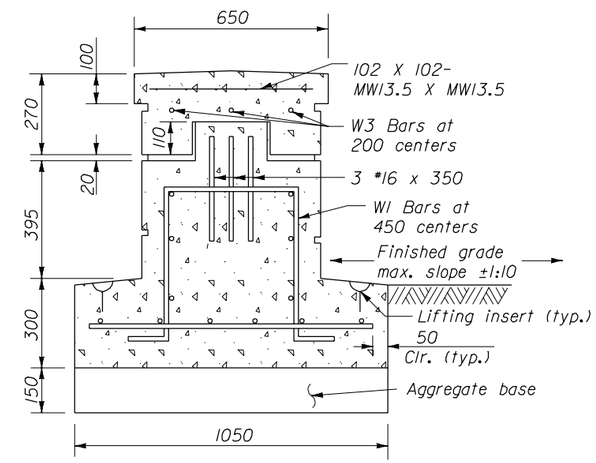

SECTION B-B

NOTES:

1. Unless otherwise shown, dimensions are in millimeters.
2. Terminal sections, Type A and Type B, are to interlock with any of the precast concrete guardwall segments.
3. Sealant for the real joint covers the perimeter joint of the capstone, sides, and top and sides of the footing.
4. Precast the entire wall section, no cast-in-place is allowed.
5. Unless located outside the clear zone, use termial sections Type A and B with an earth berm as detailed on Standard M204-1, Earth Berm for Roadside Barrier Terminal Sections, and M204-2, Earth Berm for Median Barrier Terminal Sections.
6. Minimum concrete cover 50 mm unless shown otherwise.

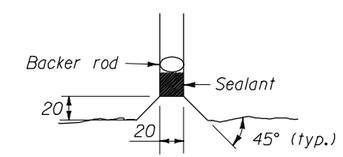

REAL JOINTS DETAIL

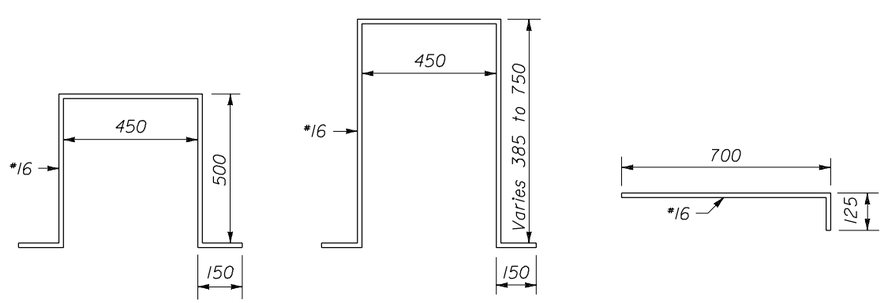

W1 BARS W4 BARS W3 BARS

BENDING DIAGRAMS

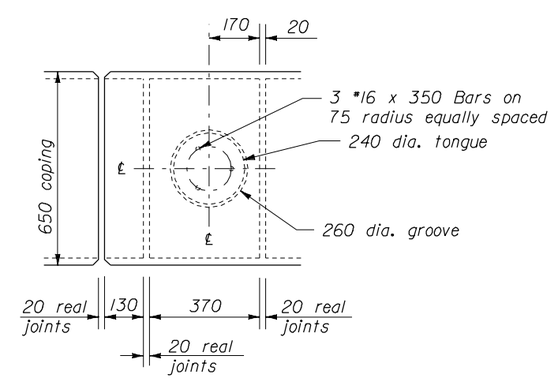

VIEW C-C

NO SCALE

U.S. DEPARTMENT OF TRANSPORTATION
FEDERAL HIGHWAY ADMINISTRATION
FEDERAL LANDS HIGHWAY OFFICE

METRIC STANDARD

PRECAST CONCRETE GUARDWALL, TYPE I TERMINAL SECTIONS, TYPES A AND B

STANDARD APPROVED FOR USE 03/96

REVISED: 5/97 7/98

STANDARD M618-3

26 FEB 99 07:37:28 i:\usr\danvan\barrier\arlwall\mst61803.dgn

MST61803.DGN